SIGN	DESCRIPTON	DATE	APPROVER

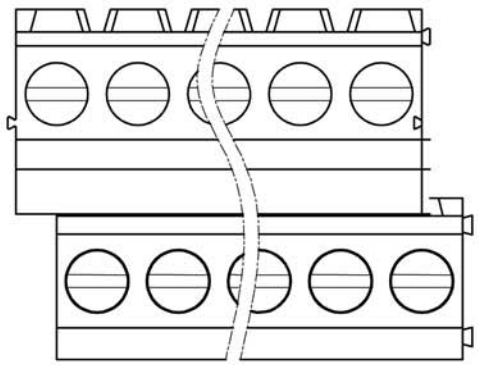

N=Number of conacts

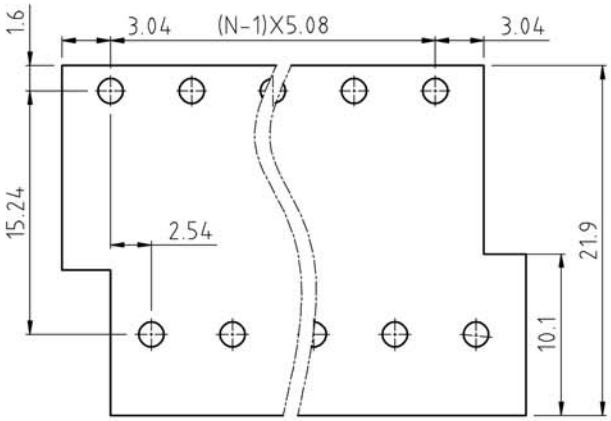

P.C.B. LAYOUT

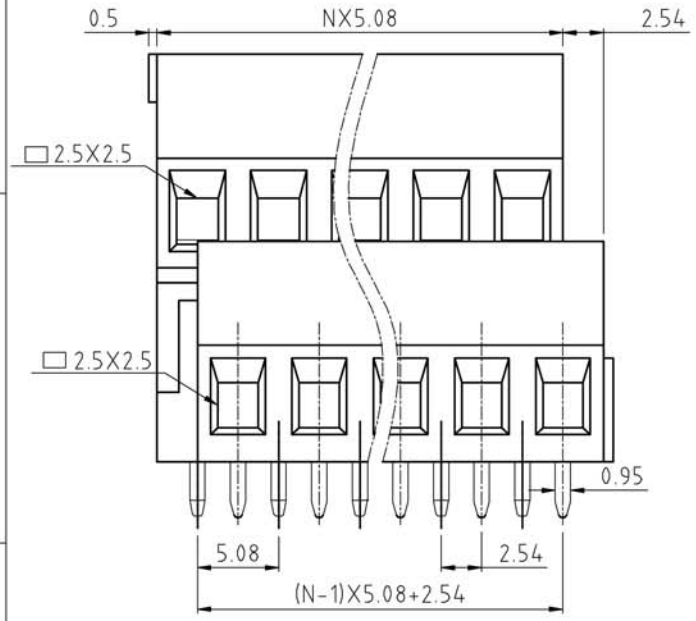

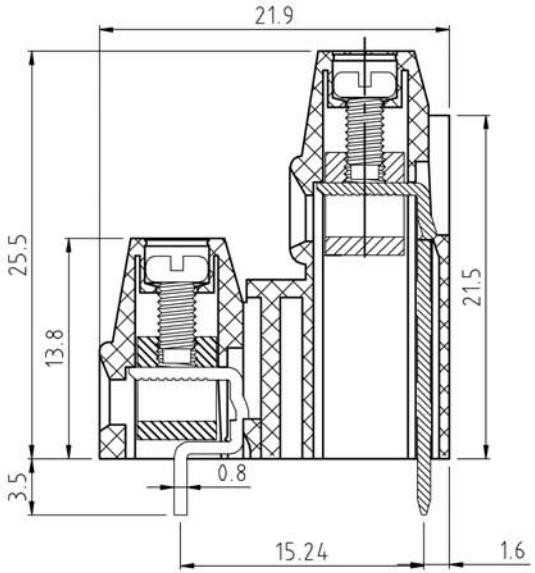

Technical Data:

Material:

- Contact(metal housing): Copper AlloyNi plated
- Terminal screw: Steel galvanized with Cr3+ plated
- Solder Pin: Copper Alloy with Tin plated
- Insulator body(housing): Polyamide(UL94V-0)

Electrical

- Voltage rating: 300VAC
- Current rating: 16 Amps/way max
- Contact resistance: 20mΩ(max)
- Withstanding Voltage: 2500VAC(1min) Test time=60sec/1pcs
- Wire range: 12-30AWG

Mechanical:

- Torque: 4.5kgf.cm/M2.5
- Operating temperature: -40°C to +105°C
- Soldring reliability:
  - Test temperature= 250°C±10°C
  - 5 seconds max

Ordering Information:

F35 - 7 - E XX - X 0 0 X 0

- XX: 2 ~ 24 (02 ~ 24)
- X: 1 "-" SCREW; 2 "-/+" SCREW
- X: 5 Green; 6 Blue; 8 Grey; A Black

WELINK 上海拓尔普电子科技有限公司 Welink International Co.,LTD.

TOLERANCE		APPROVED:		NAME: F35 - 7 - pitch 5.08mm - series
X.	±0.50	CHECKED:		
X.X	±0.30	DRAWN: Yang Ming 2012,06,20		
X.XX	±0.20	UNITS: mm	REV: A	PART NO: F357EXX100X0
X°	±1°	SCALE: 3 / 1	PAGE: 1 / 1	DWG NO: 9F357E001A